MAX-PLANCK-INSTITUT
FÜR PLASMAPHYSIK

Experience with stray EC radiation protection on Wendelstein 7-X

Oliver P. Ford on behalf of the W7-X ECRH group and the W7-X Team

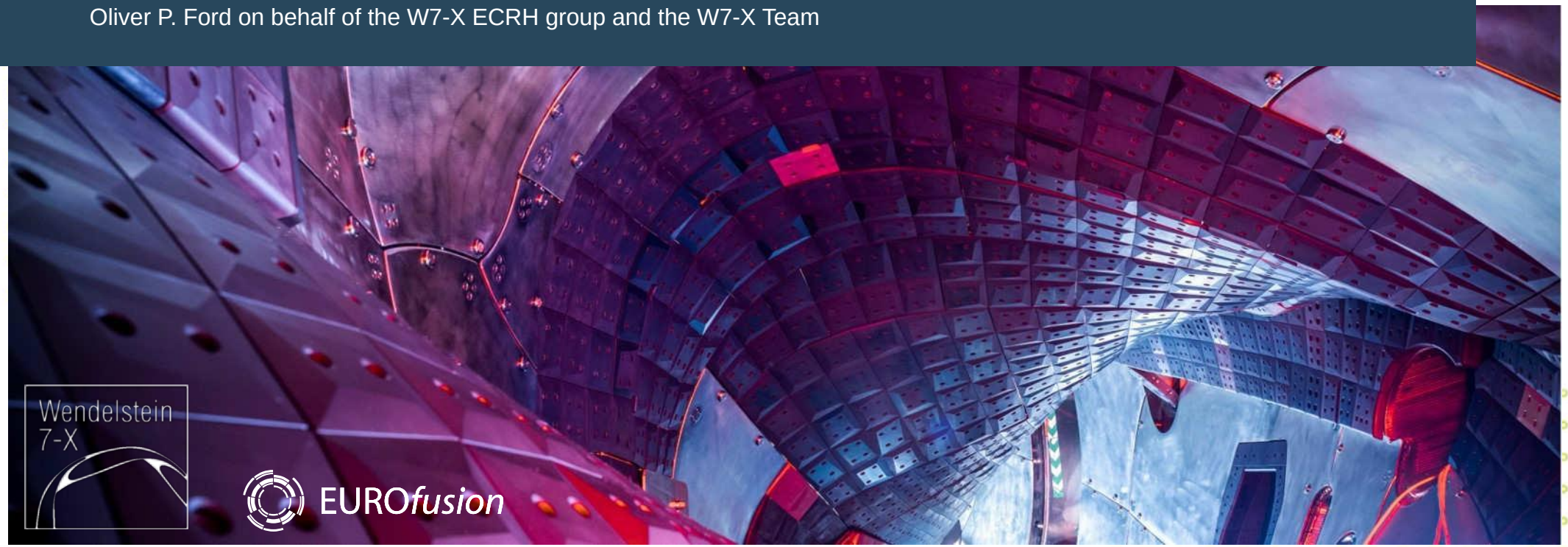

ITPA TG Diagnostics. April 2024

This work has been carried out within the framework of the EUROfusion Consortium, funded by the European Union via the Euratom Research and Training Programme (Grant Agreement No 101052200 — EUROfusion). Views and opinions expressed are however those of the author(s) only and do not necessarily reflect those of the European Union or the European Commission. Neither the European Union nor the European Commission can be held responsible for them.

Initial calculations

[H. Laqua et al. APS 2023]

General consideration of radiation:

With no plasma --> Standing wave pattern with slow variations.

With plasma --> Scrambled by plasma --> diffusive gas-like.

Most basic calculation:

$$p = \underbrace{P_{in}\,(1 - \;_{1})}_{\text{Non-absorbed power limited to 1MW}} \,/\, (\underbrace{A_{wall}\;\;_{wall}}_{\text{Calculation is very sensitive to wall reflection coefficient.}} + A_{windows})$$

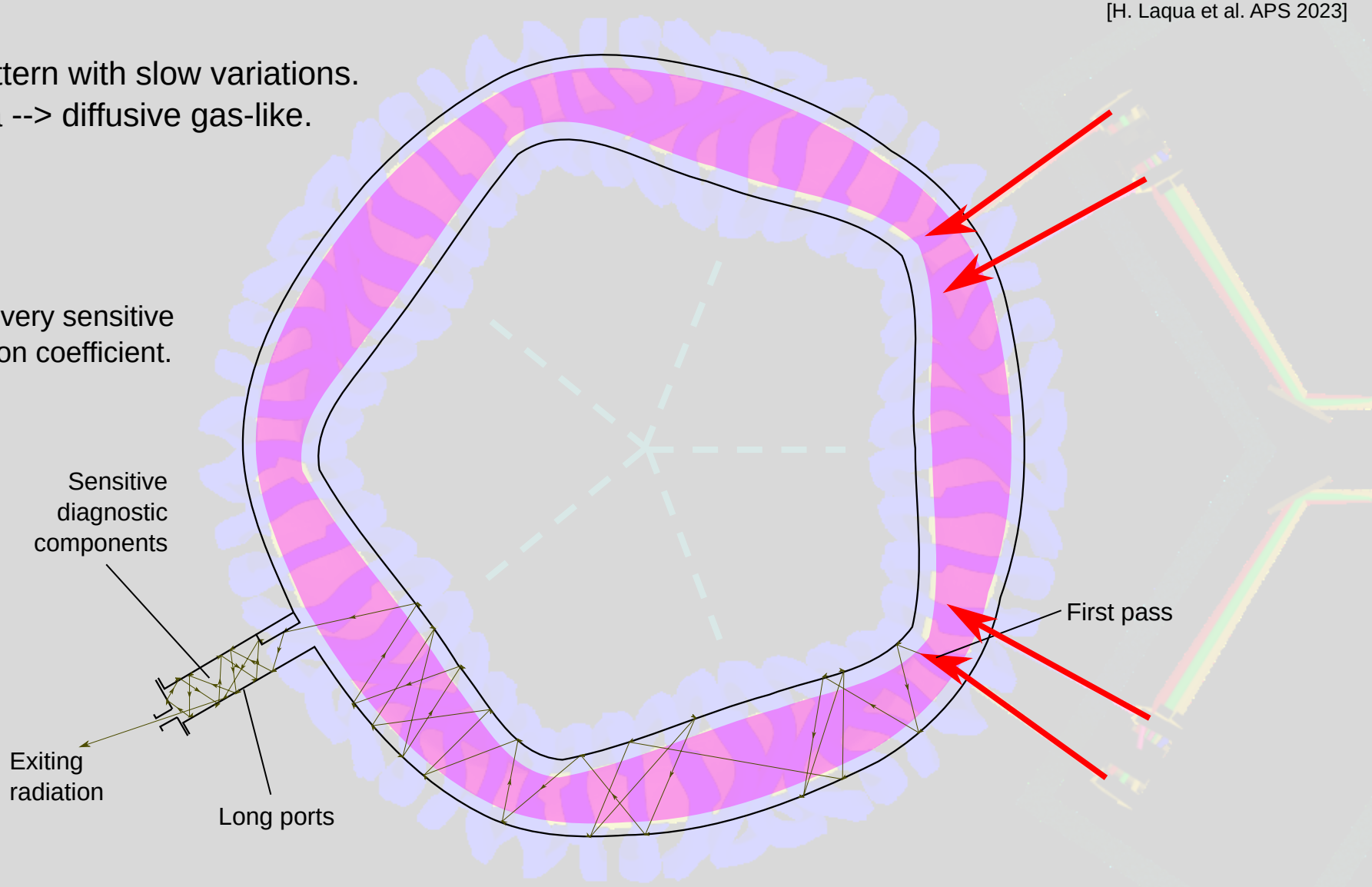

Initial calculations

[H. Laqua et al. APS 2023]

General consideration of radiation:
With no plasma --> Standing wave pattern with slow variations.
With plasma --> Scrambled by plasma --> diffusive gas-like.

Most basic calculation:

$$p = \underbrace{P_{in}\,(1 - \alpha_1)}_{\text{Non-absorbed power limited to 1MW}} \,/\, (\underbrace{A_{wall}\,\alpha_{wall}}_{\text{Calculation is very sensitive to wall reflection coefficient.}} + A_{windows})$$

Better: Coupled resonators for each module:
O(100) kWm^{-2} near ECRH
O(10) kWm^{-2} on opposite side.
x4 less behind wall components.

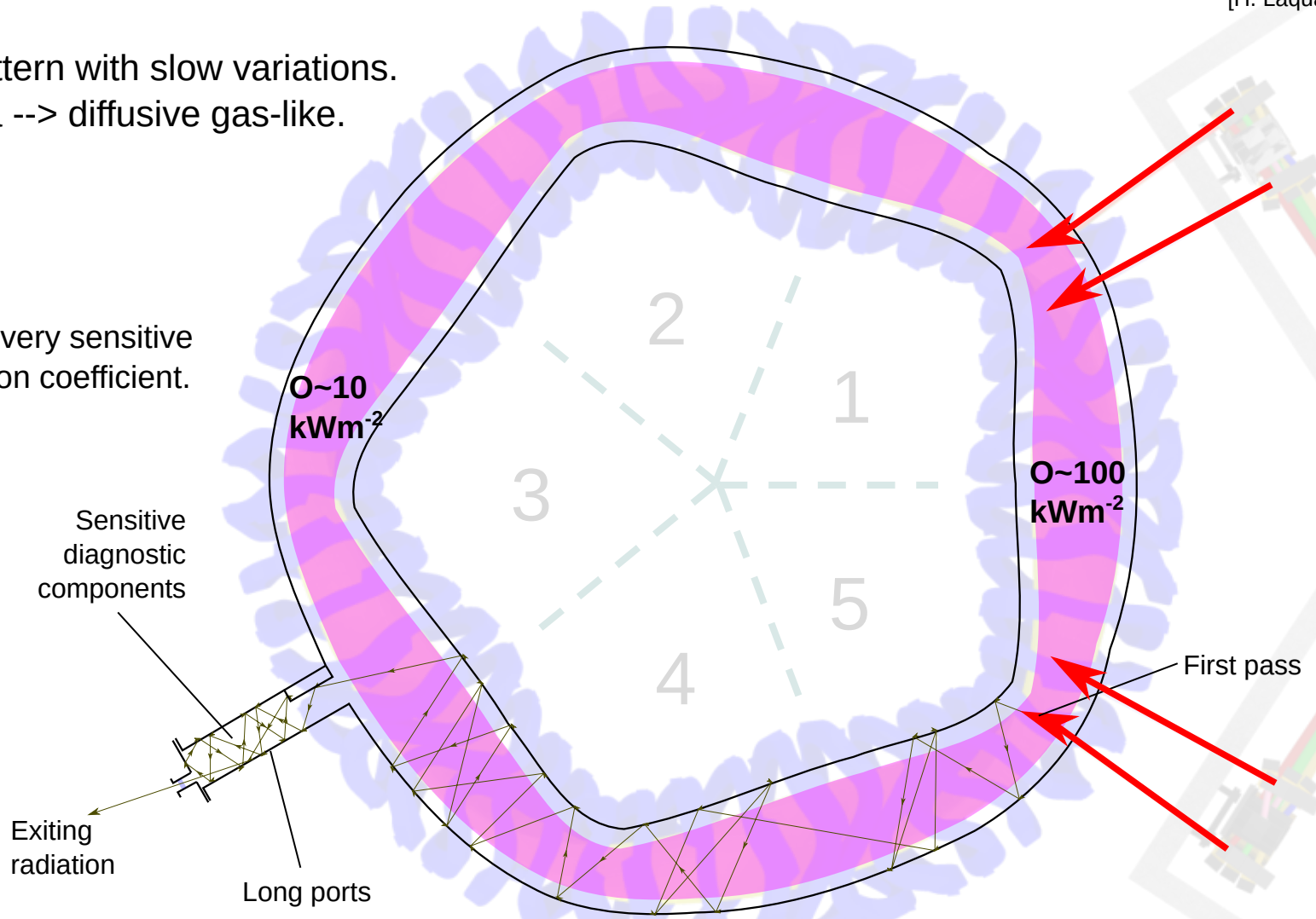

Initial calculations

[H. Laqua et al. APS 2023]

General consideration of radiation:
With no plasma --> Standing wave pattern with slow variations.
With plasma --> Scrambled by plasma --> diffusive gas-like.

Most basic calculation:

$$p = \underbrace{P_{in}\,(1 - \alpha_1)}_{\text{Non-absorbed power limited to 1MW}} \,/\, (\underbrace{A_{wall}\,\alpha_{wall}}_{\text{Calculation is very sensitive to wall reflection coefficient.}} + A_{windows})$$

Better: Coupled resonators for each module:
O(100) kWm^{-2} near ECRH
O(10) kWm^{-2} on opposite side.
x4 less behind wall components.

--> **All components must withstand 50 kW m^{-2}**
--> Design review process

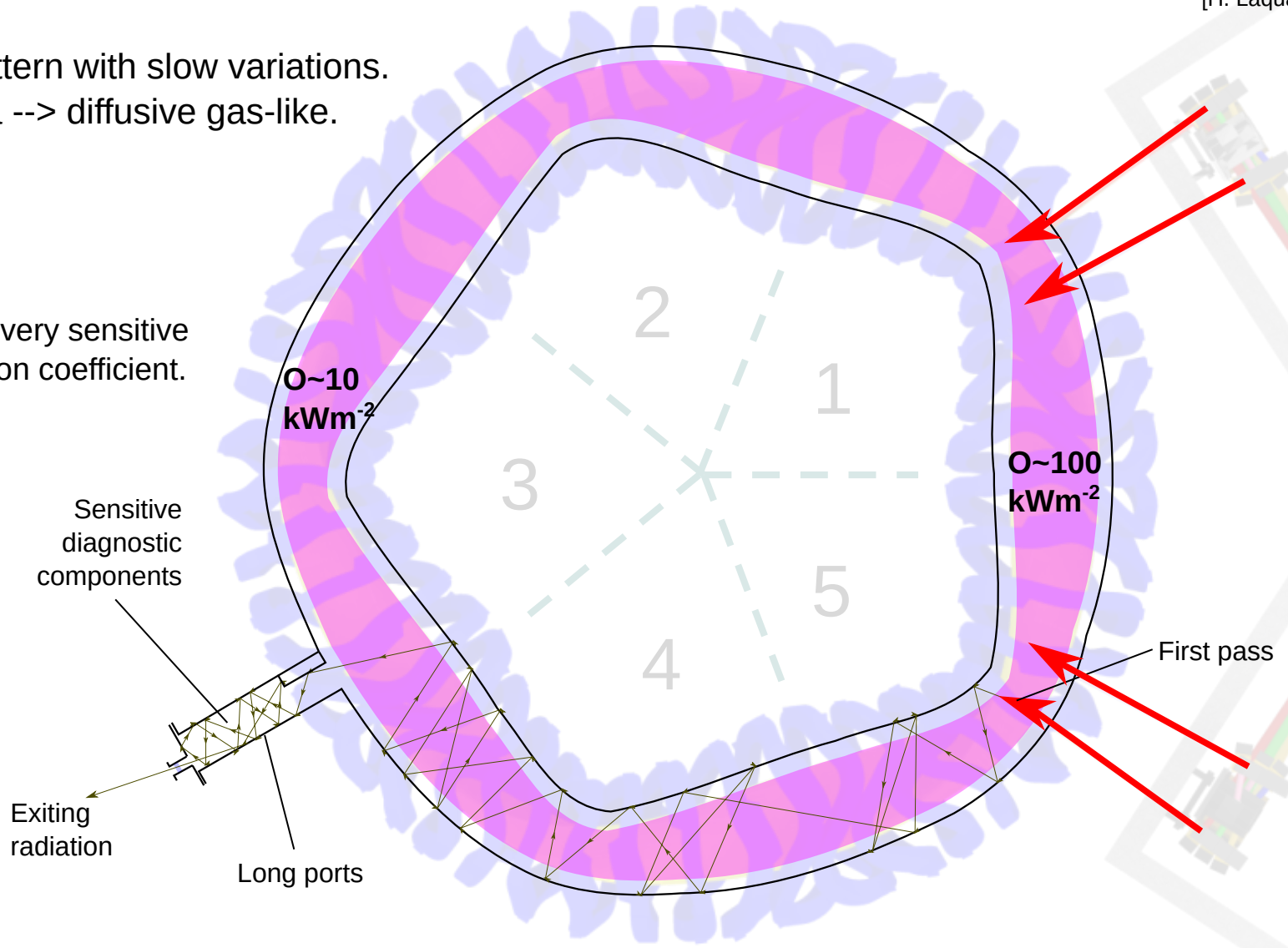

Acceptance tests - MISTRAL

[H. Oosterbeek, EPJ Web Conf. **277** 04009]

Microwave Stray Radiation Exposure Facility (MISTRAL):

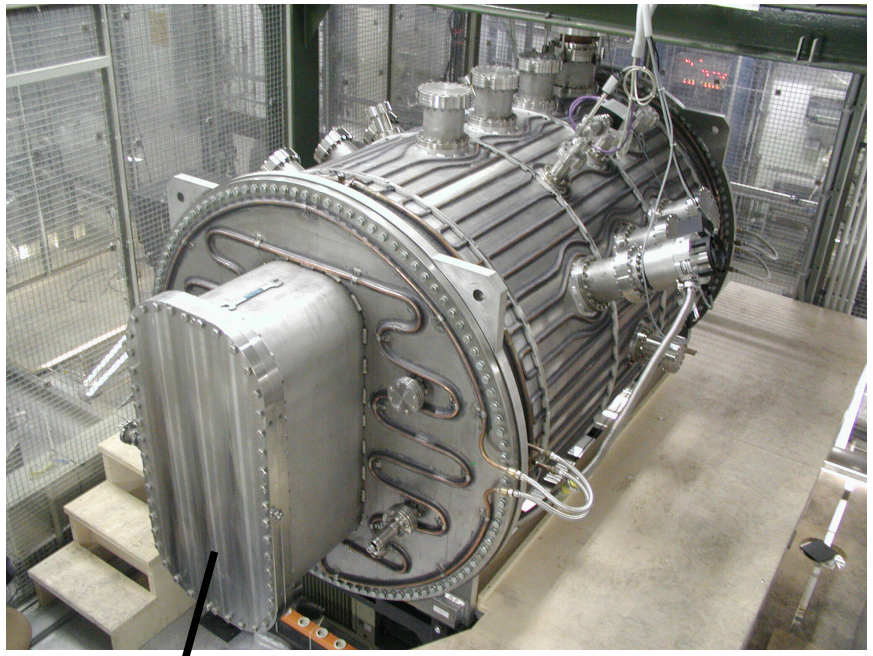

Large flange for testing complete W7-X plug-ins.

- Uses W7-X ECRH gyrotron between W7-X experiment campaigns.
- Input gaussian beam bounced around edge of cylindrical vessel.
- Generates continuous stray radiation field of ~55 kW m^{-2}.

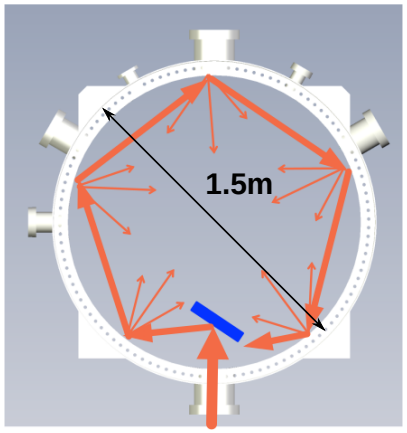

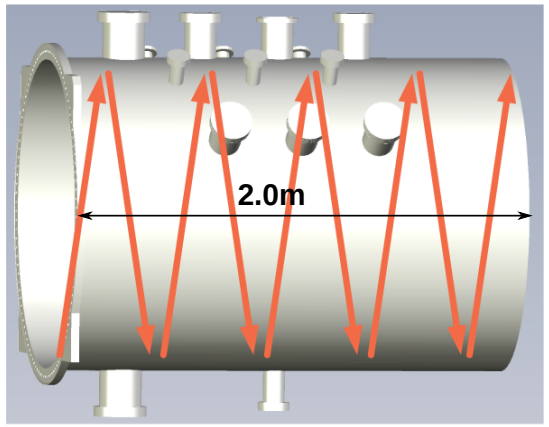

Acceptance tests - MISTRAL

[H. Oosterbeek, EPJ Web Conf. **277** 04009]

Microwave Stray Radiation Exposure Facility (MISTRAL):

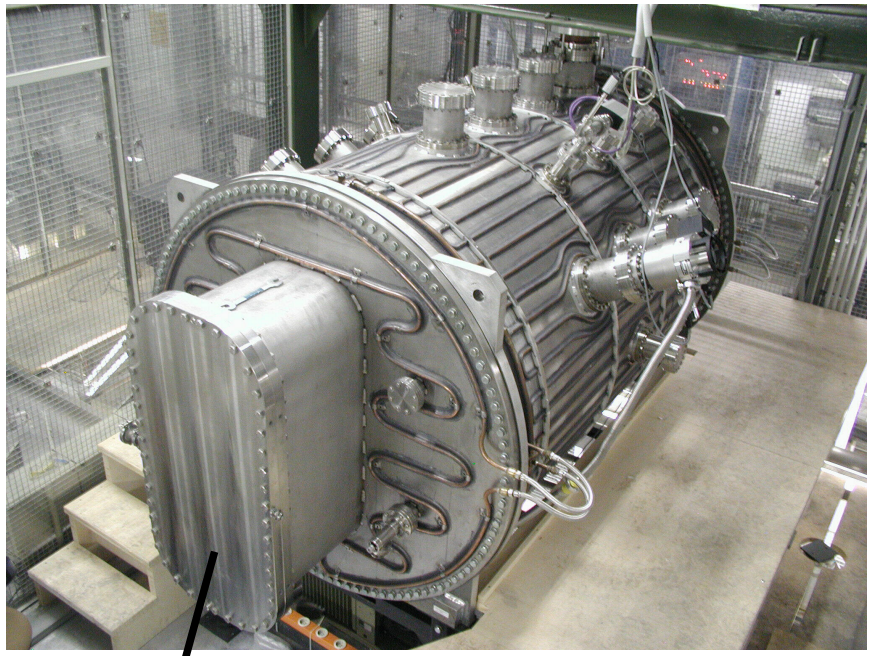

- Uses W7-X ECRH gyrotron between W7-X experiment campaigns.
- Input gaussian beam bounced around edge of cylindrical vessel.
- Generates continuous stray radiation field of ~55 kW m^{-2}.

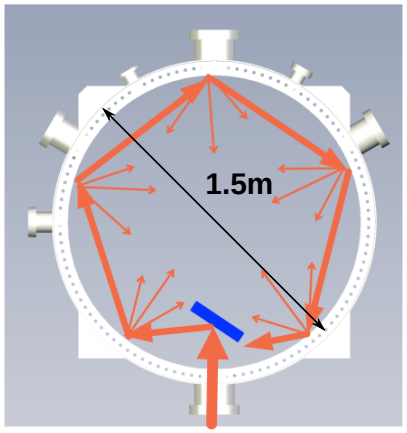

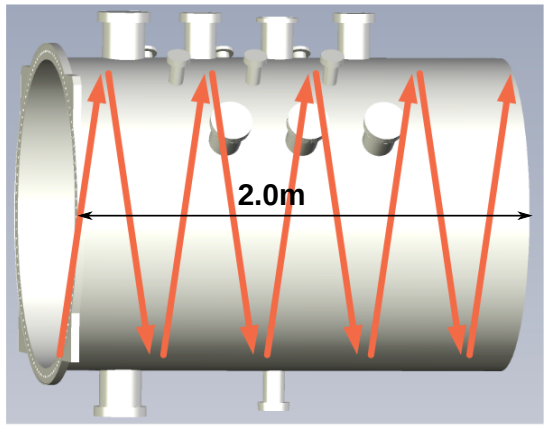

Large flange for testing complete W7-X plug-ins.

Caloric load on DN150 CF port used to calibrate total power and measure transmission of samples, e.g. vacuum windows. In-built pyrometer for measuring sample absorption:

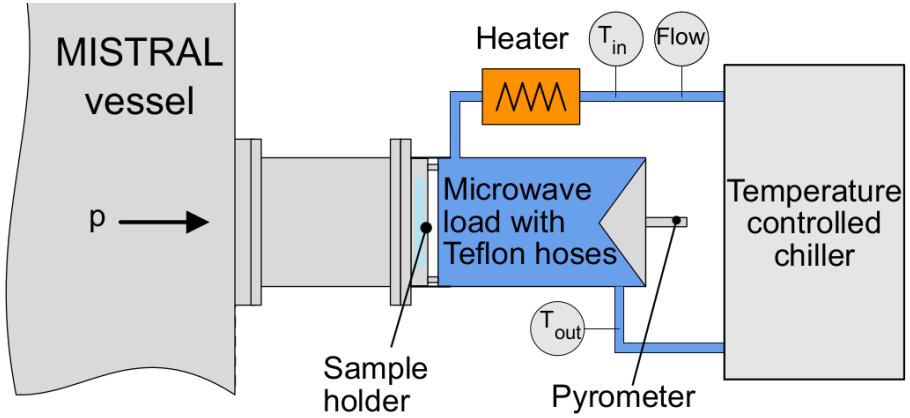

Acceptance tests - MISTRAL

[MISTRAL Reports (in W7X IDM)
2KGWLF, 28ML52]

MISTRAL has completed tests for ITER stray radiation sensors:

- ITER proto-type in-vessel ECH-sensors (55.GB)

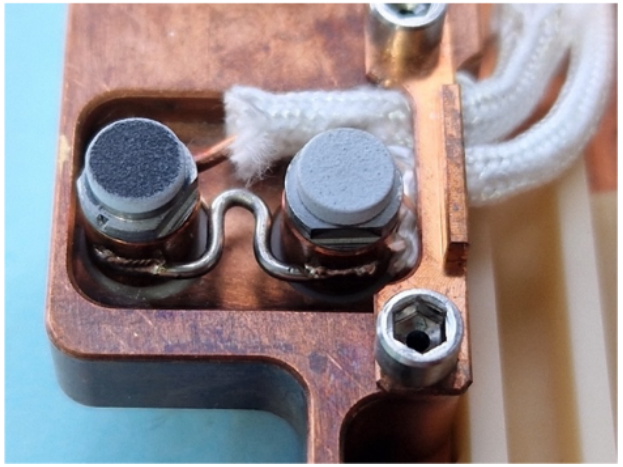

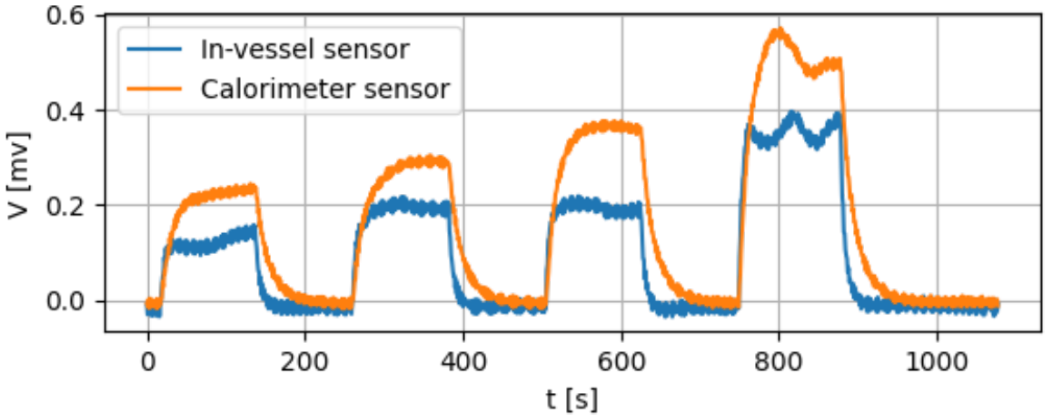

Acceptance tests - MISTRAL

[MISTRAL Reports (in W7X IDM)
2KGWLF, 28ML52]

MISTRAL has completed tests for ITER stray radiation sensors:

- ITER proto-type in-vessel ECH-sensors (55.GB)
- ITER ECH window sensors

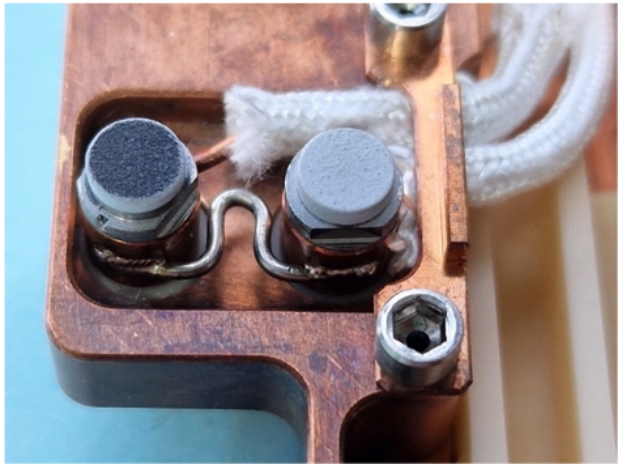

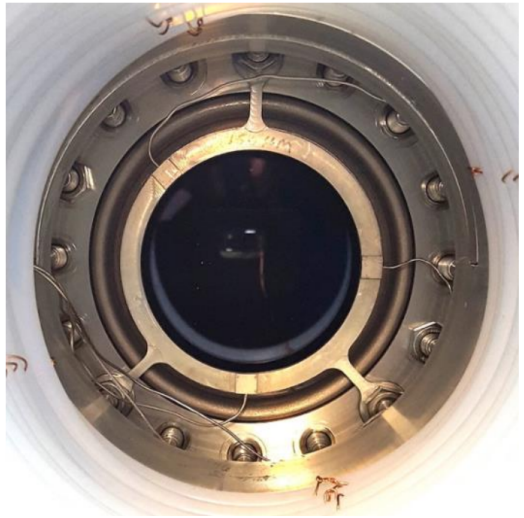

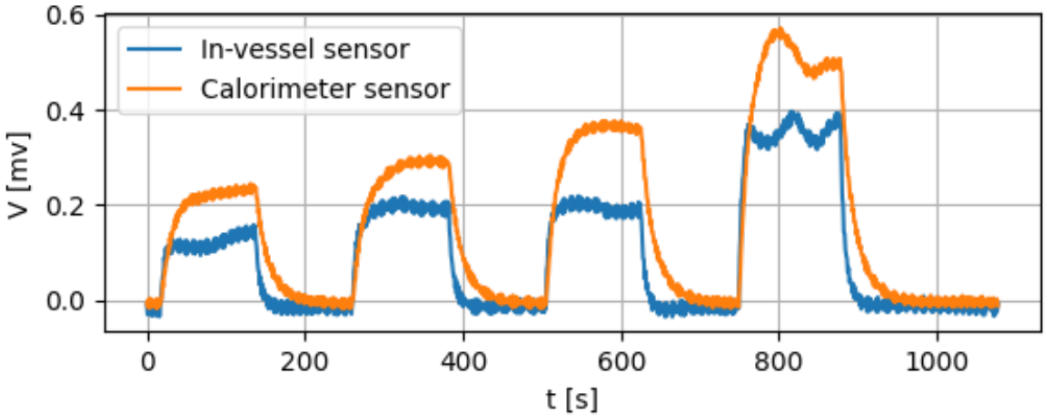

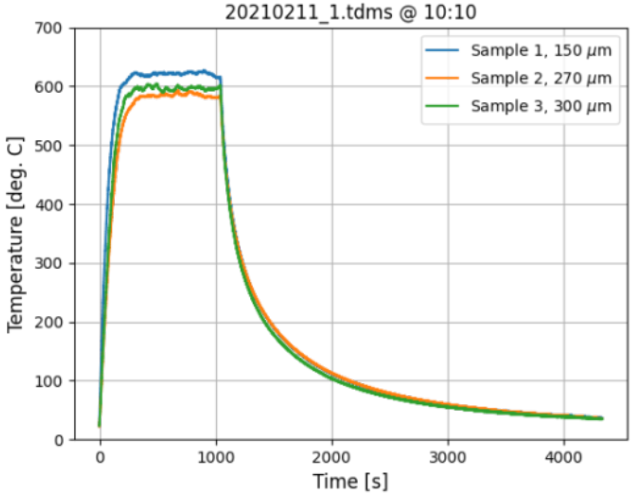

Fig. 11. Response of the sensors inside the MISTRAL using power setting 10 kW CW. In the equilibrium phase decreased absorption can be seen going from 150 μm coating thickness to 300 μm coating thickness.
(For this experiment a single thermo-couple per sensor was used, at location 6h as can been seen in Fig. 10 such that they are mounted up right.)

Mitigation - Coils and cables

[D. Hathiramani et al.
Fus. Eng. Des. **88** 1232– 1235]

Several shielding methods were developed and tested:

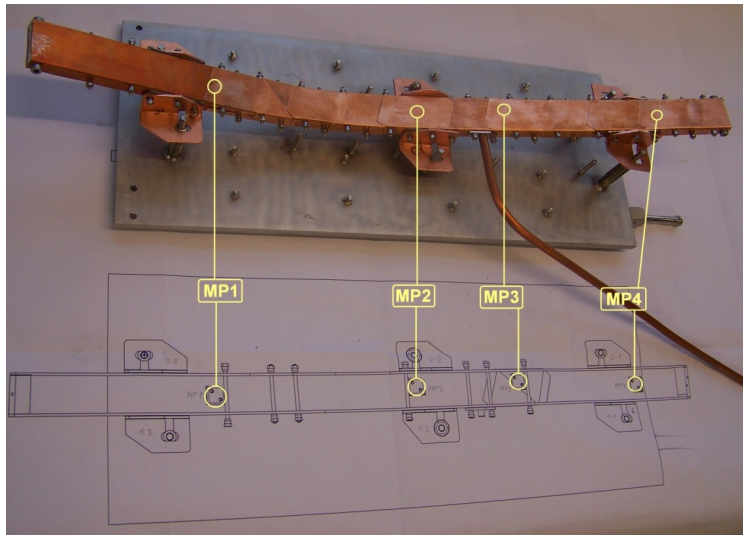

Copper plate shielding of diamagnetic magnetic loop, with good thermal conduction to cooled structures.

- Avoid braided metal meshes, ceramics etc.

- Cables in copper tubes with holes for vacuum pumping.

Mitigation - Coils and cables

Several shielding methods were developed and tested:

[D. Hathiramani et al.
Fus. Eng. Des. **88** 1232– 1235]

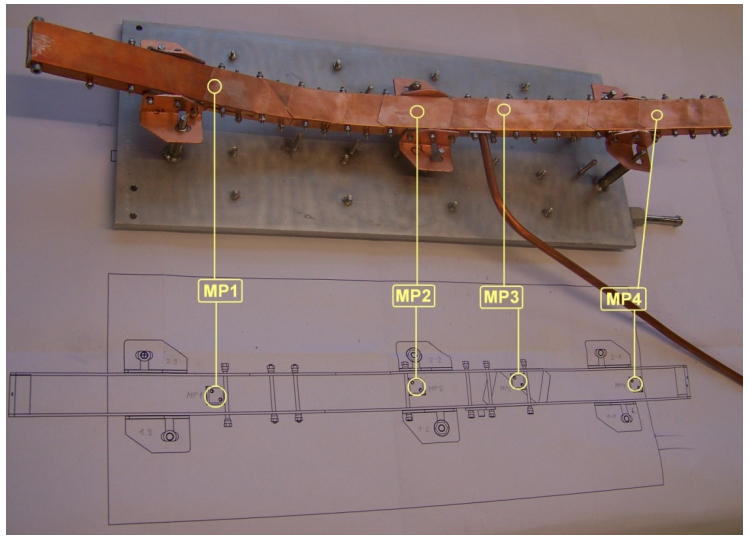

Copper plate shielding of diamagnetic magnetic loop, with good thermal conduction to cooled structures.

Rogowski coils in stainless steel pipes with holes for vacuum pumping small enough to exclude stray radiation (0.7mm) and copper strips for heat conduction to cooled supports.

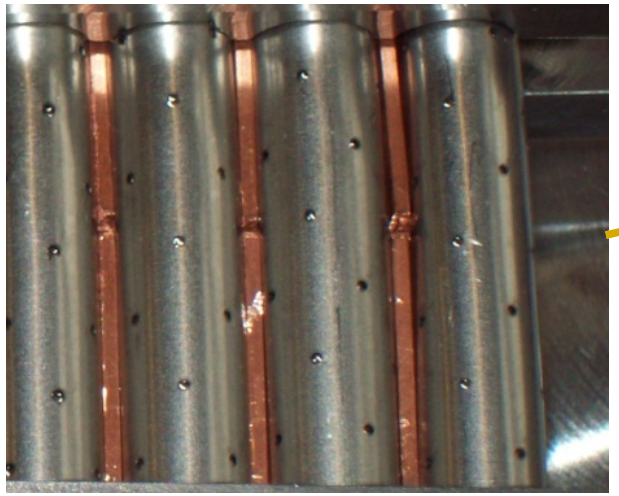

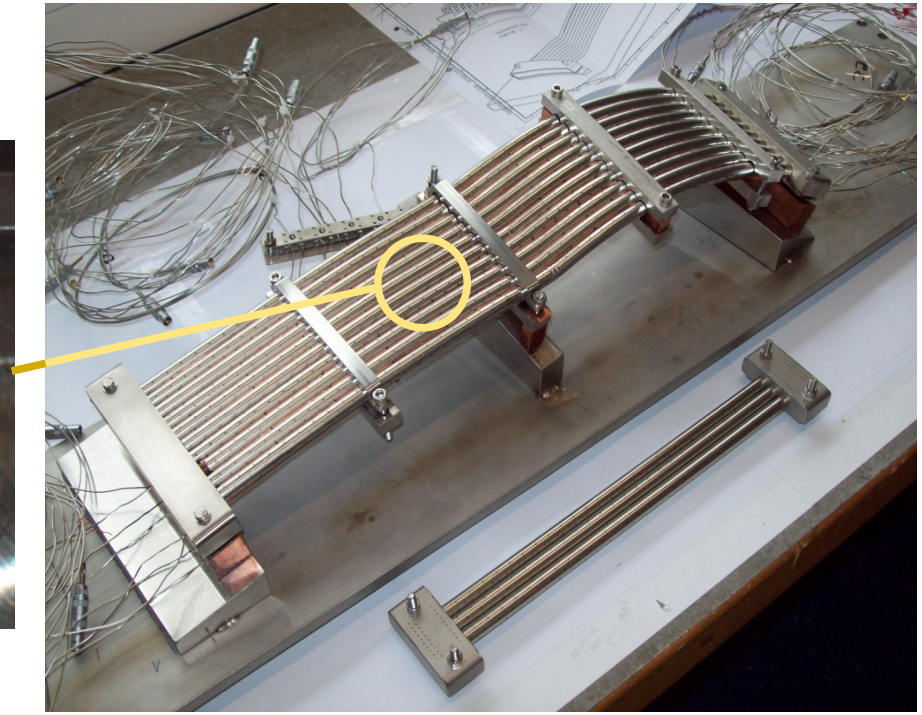

- Avoid braided metal meshes, ceramics etc.

- Cables in copper tubes with holes for vacuum pumping.

Mitigation - Filters and meshes

Various filters developed to protect sensitive sensors:

Dochroic filters for pressure sensors:

337 x 0.7mm holes
Molecular flow reduced by x4.8.

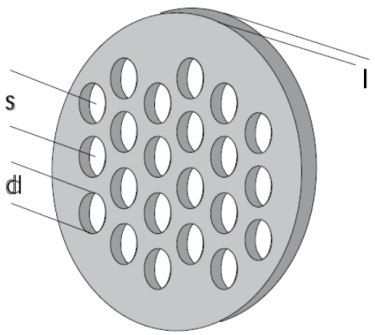

[C. Winnewisser, et al. Appl. Phys. A66,593-598]

Mitigation - Filters and meshes

Various filters developed to protect sensitive sensors:

Dochroic filters for pressure sensors:

337 x 0.7mm holes
Molecular flow reduced by x4.8.

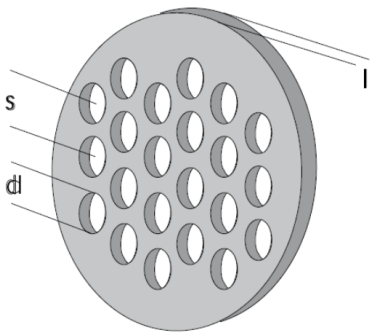

[C. Winnewisser, et al. Appl. Phys. A66,593-598]

Bolometry:

- Metal mesh and TiO/Al2O3 coating to supress expected 20kW m^{-2} ECRH stray-radiation.

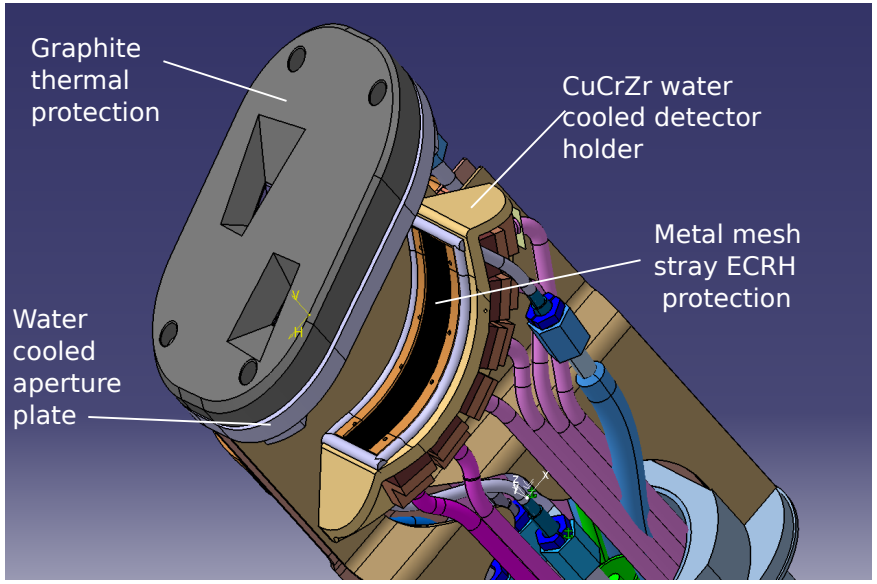

- Collaboration with ITER-bolometer team
- W7-X as a test-bed of ITER bolometers.

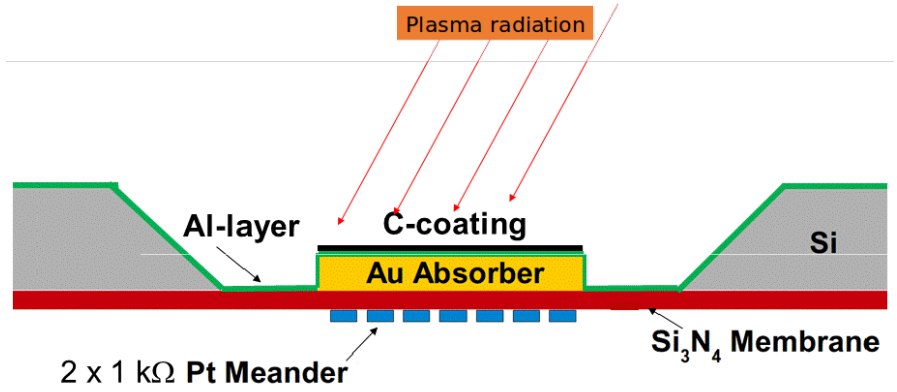

Mitigation - Windows

[R. Köenig, RSI **81** 10E133]

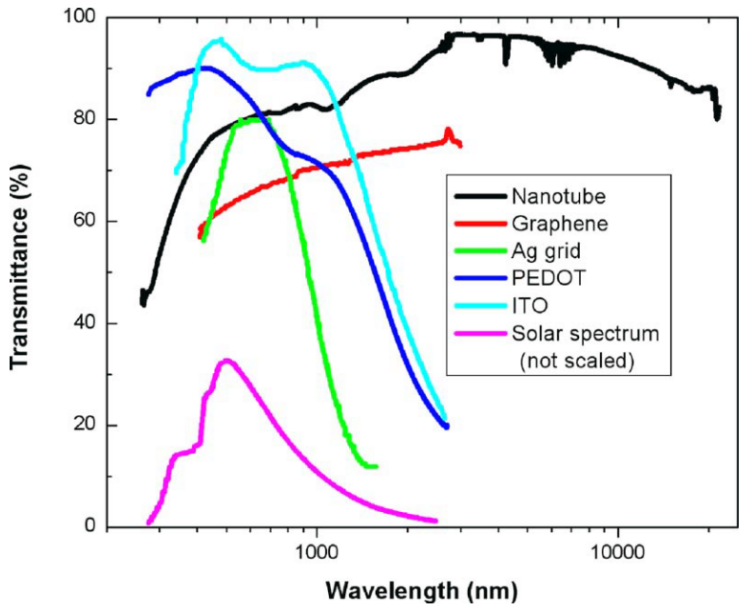

For optical diagnostics, various coatings investigated for windows.

Mitigation - Windows

[R. Köenig, RSI **81** 10E133]

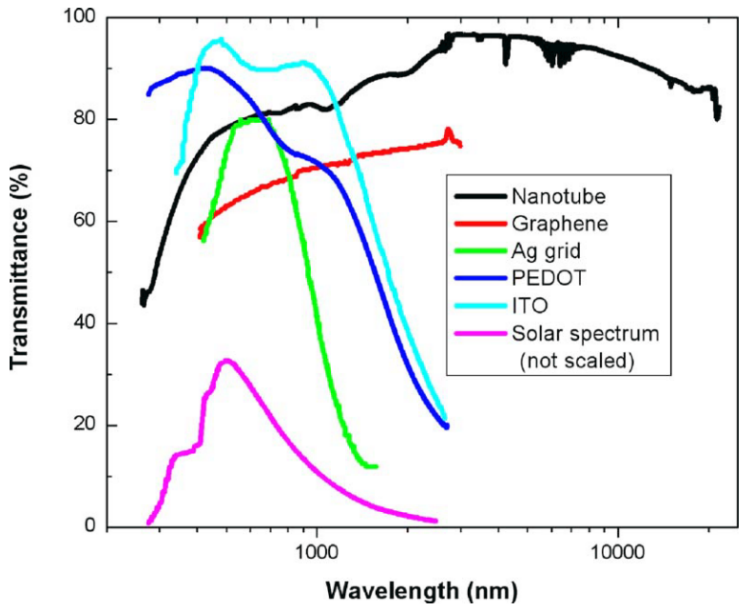

For optical diagnostics, various coatings investigated for windows.

In practice, ITO coating on air-side has become standard for optical diagnostics. It is easy to order and is applied to also most windows where IR transmission is not required.

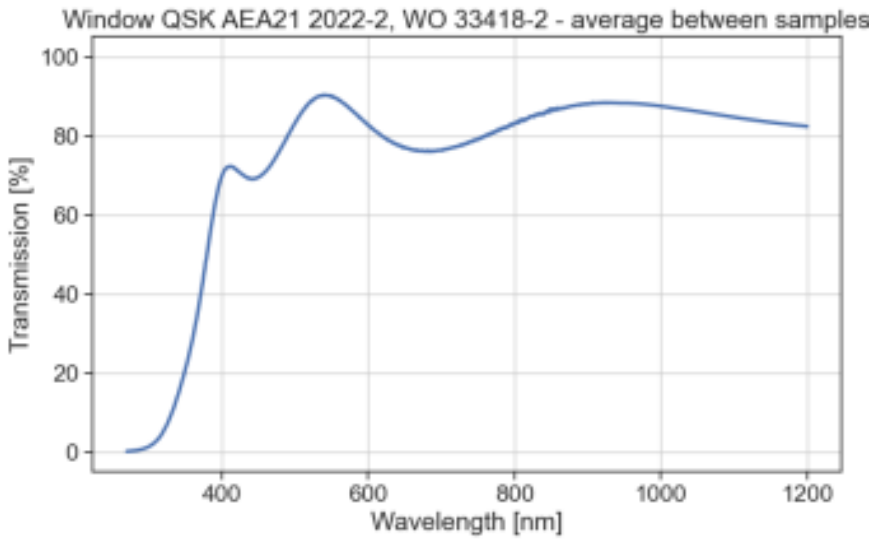

Mitigation - Windows

[R. Köenig, RSI **81** 10E133]

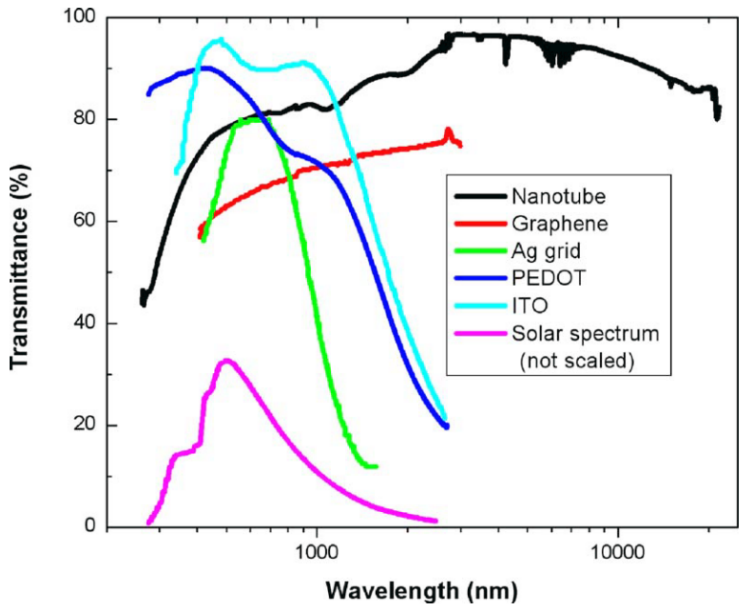

For optical diagnostics, various coatings investigated for windows.

In practice, ITO coating on air-side has become standard for optical diagnostics. It is easy to order and is applied to also most windows where IR transmission is not required.

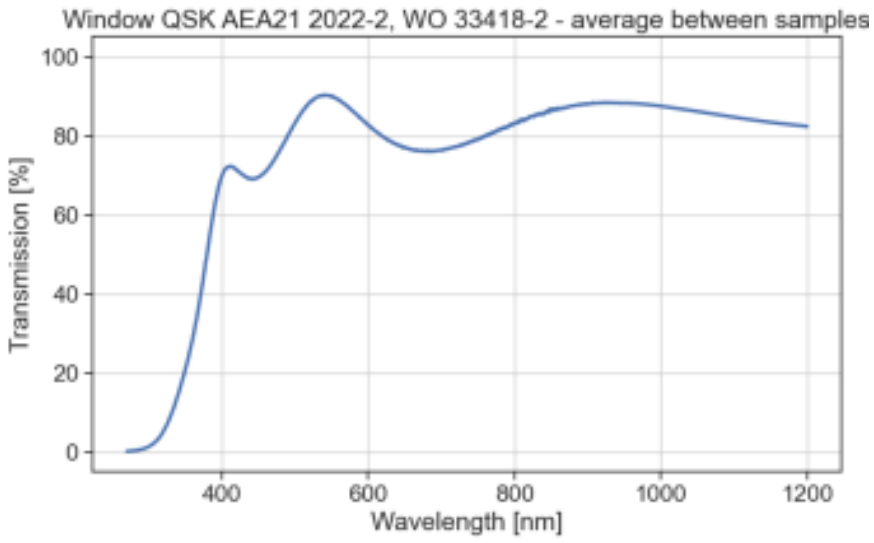

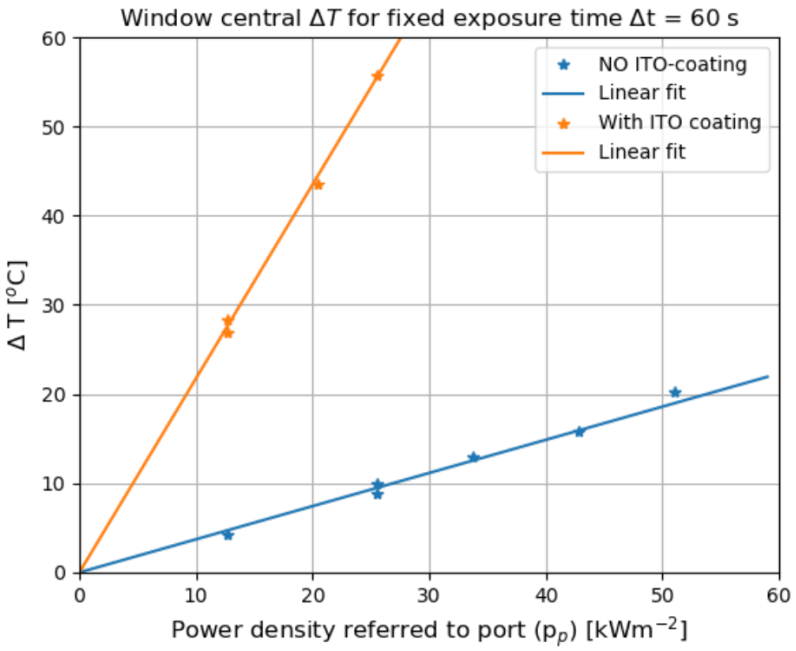

But care is needed! - CXRS windows ordered with spec for <80 Ωm^{-2} showed in later testing O~10 kΩm^{-2} and very rapid temperature rise when exposed to 20 kWm^{-2}. For the window, a bad ITO coating is much worse than none!

Bolometers

[H. Laqua APS 2023,
R.König ITPA TGD]

- Graphite bolometers developed for ECRH measurements.
- Tested with short pulses in MISTRAL

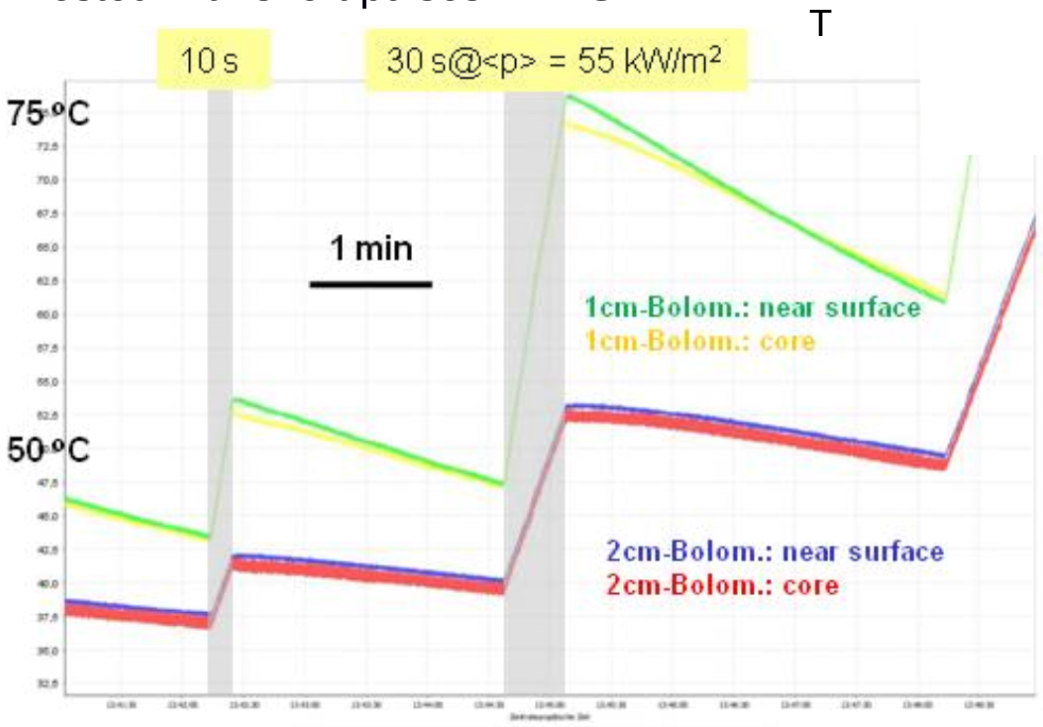

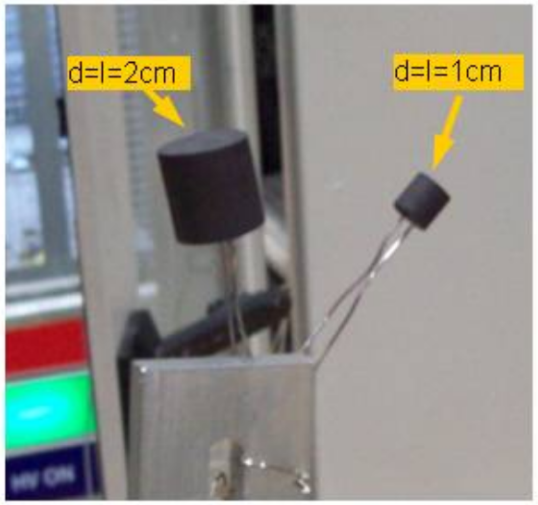

- 10mm fine grain graphite bolometer.
- 8mm copper bolometer with Al_2O_3/TiO_2 coating.
  --> 60 - 75% absorption.

Bolometers

[H. Laqua APS 2023,
R.König ITPA TGD]

- Graphite bolometers developed for ECRH measurements.
- Tested with short pulses in MISTRAL

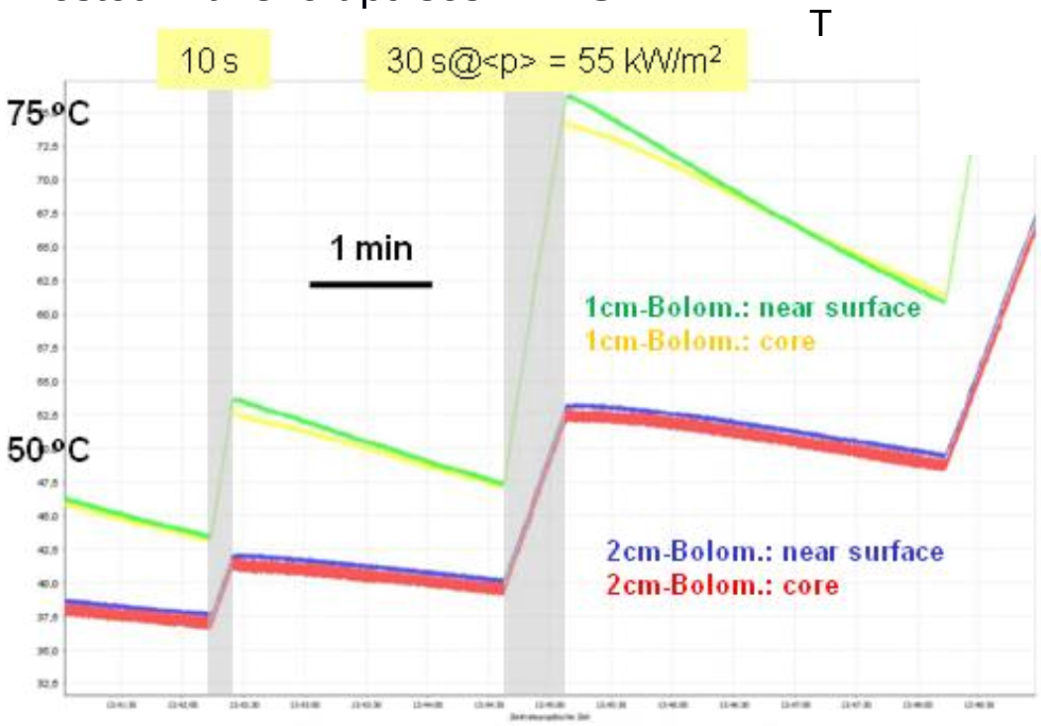

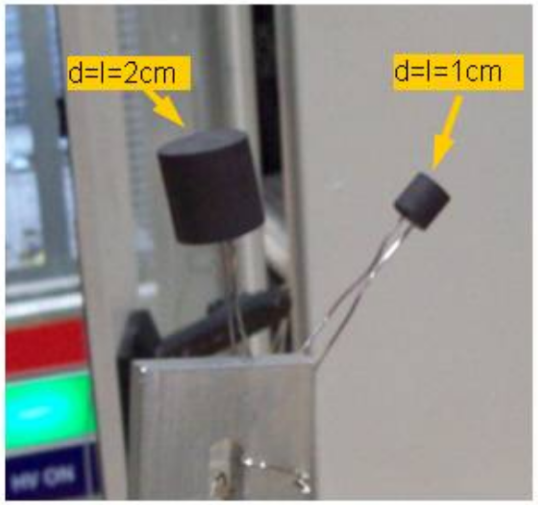

Used e.g. in ECRH launcher port to monitor stray radiation near sensitive port vacuum bellows (wall to cryostat):

O~ 5kWm^{-2} MW^{-1} --> ΔT ~ 35°C for 30min --> OK

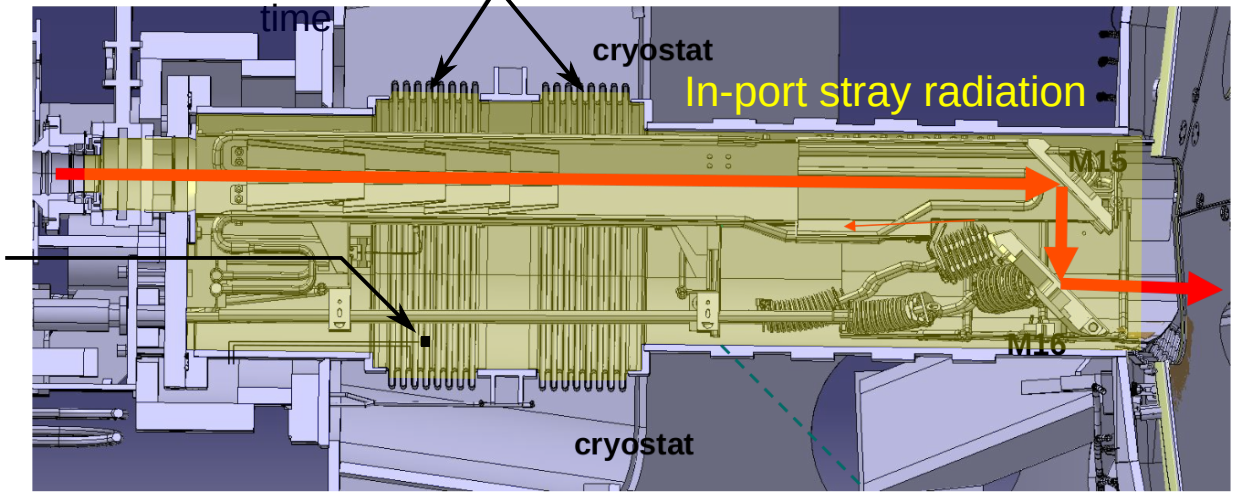

Bolometer

- 10mm fine grain graphite bolometer.
- 8mm copper bolometer with Al_2O_3/TiO_2 coating.
  --> 60 - 75% absorption.

ECRH Sniffer probes

[S. Marsten IAEA Fus. Eng. Conf 2016,
D. Moseev RSI **87** 083505,
D. Moseev EPJ Web Conf. **147**, 03002]

- Sniffer probes developed for ECRH stray radiation measurements in W7-X, used for safety interlock to stop ECRH on failed breakdown or poor absorption.
- One in each module.

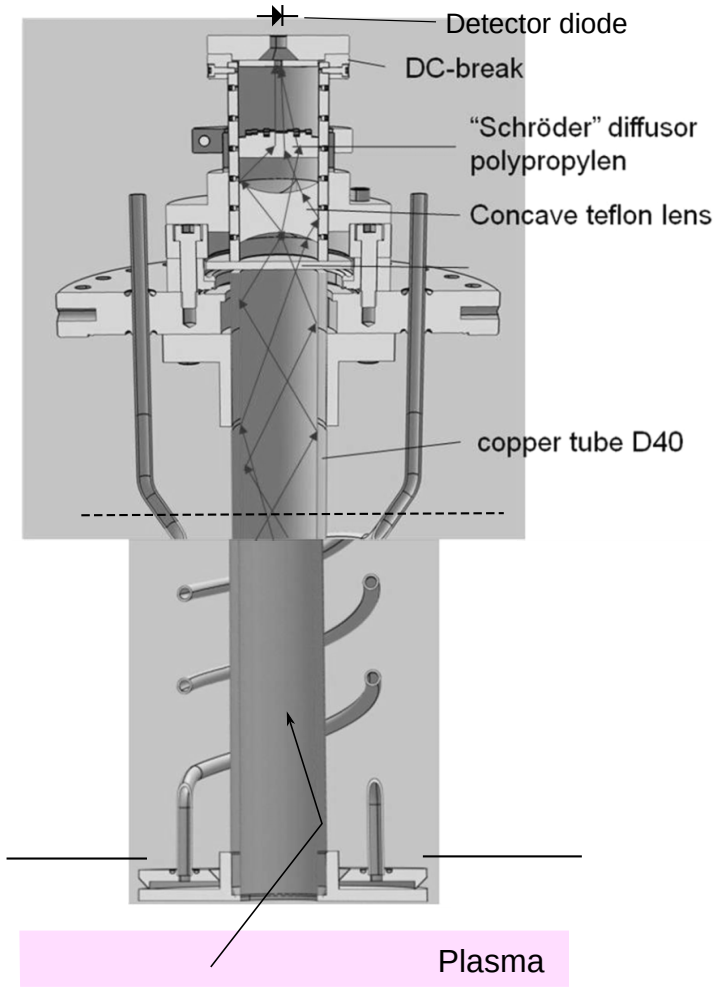

ECRH Sniffer probes

[S. Marsten IAEA Fus. Eng. Conf 2016,
D. Moseev RSI **87** 083505,
D. Moseev EPJ Web Conf. **147**, 03002]

- Sniffer probes developed for ECRH stray radiation measurements in W7-X, used for safety interlock to stop ECRH on failed breakdown or poor absorption.
- One in each module.

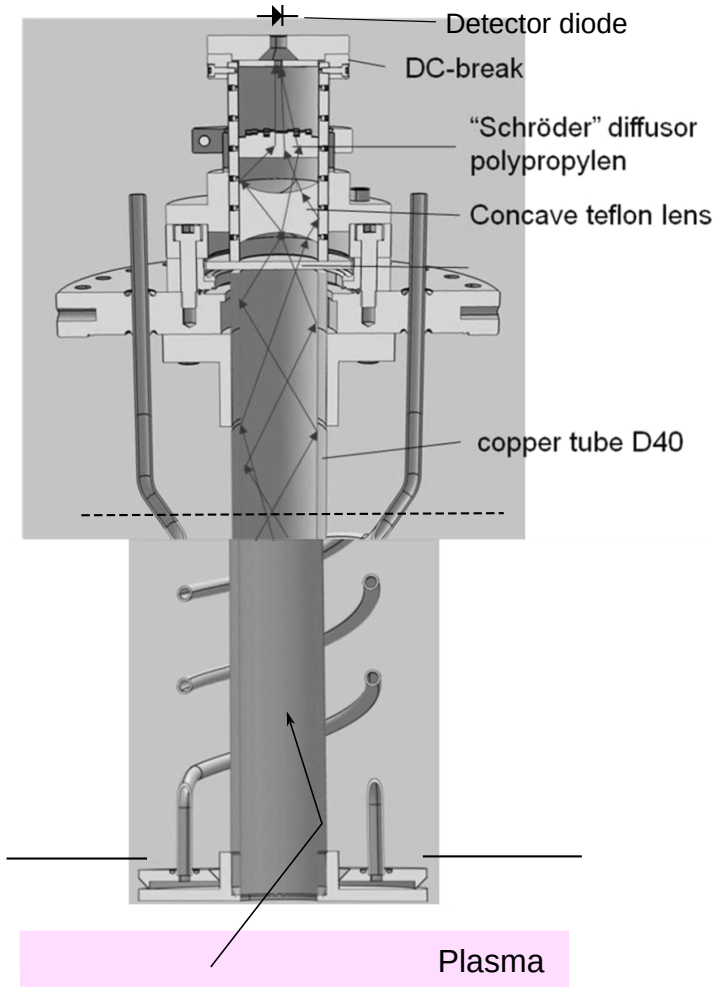

- Significant stray-radiation seen during plasma start-up, but short duration:

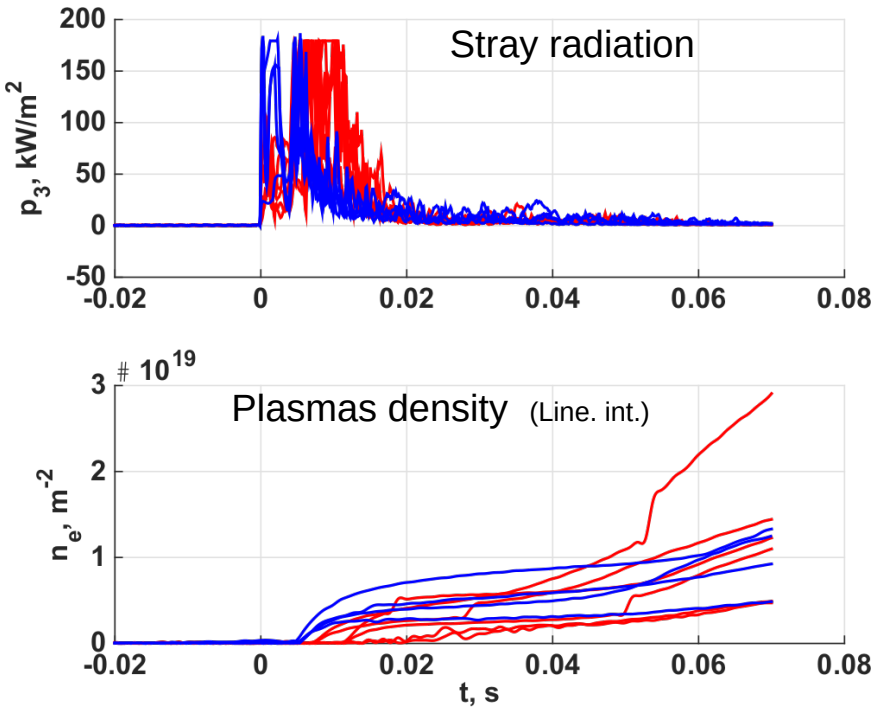

During plasmas (O2 ECRH)

[H. Laqua et al. APS 2023]

- Recently popular plasma scenario:
  1) Breakdown with X2 ECRH.

  2) Switch to only NBI:
     High n_e, low $T_{e/i}$,
     high ∇n_e --> Reduced turbulence

  3) Reintroduce ECRH as O2 to take advantage of improved confinement.

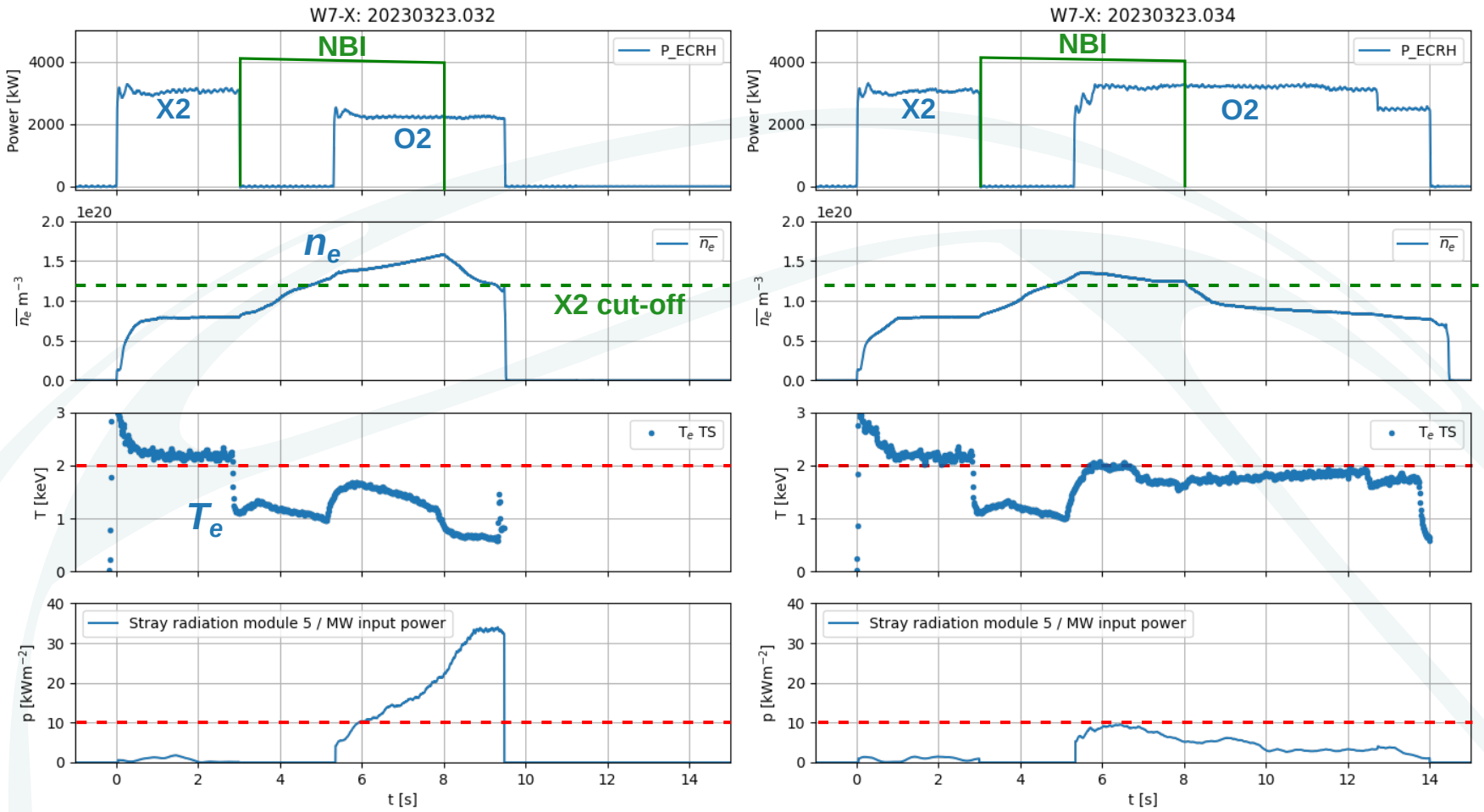

During plasmas (O2 ECRH)

[H. Laqua et al. APS 2023]

- Recently popular plasma scenario:
  1) Breakdown with X2 ECRH.

  2) Switch to only NBI:
     High n_e, low $T_{e/i}$,
     high ∇n_e --> Reduced turbulence

  3) Reintroduce ECRH as O2 to take advantage of improved confinement.

Particularly bad conditions for stray radiation. Measured > 20 kWm^{-2} with sniffer probes (near launcher) for ~ 1s.

Desired to push scenario to longer duration, higher power and density.

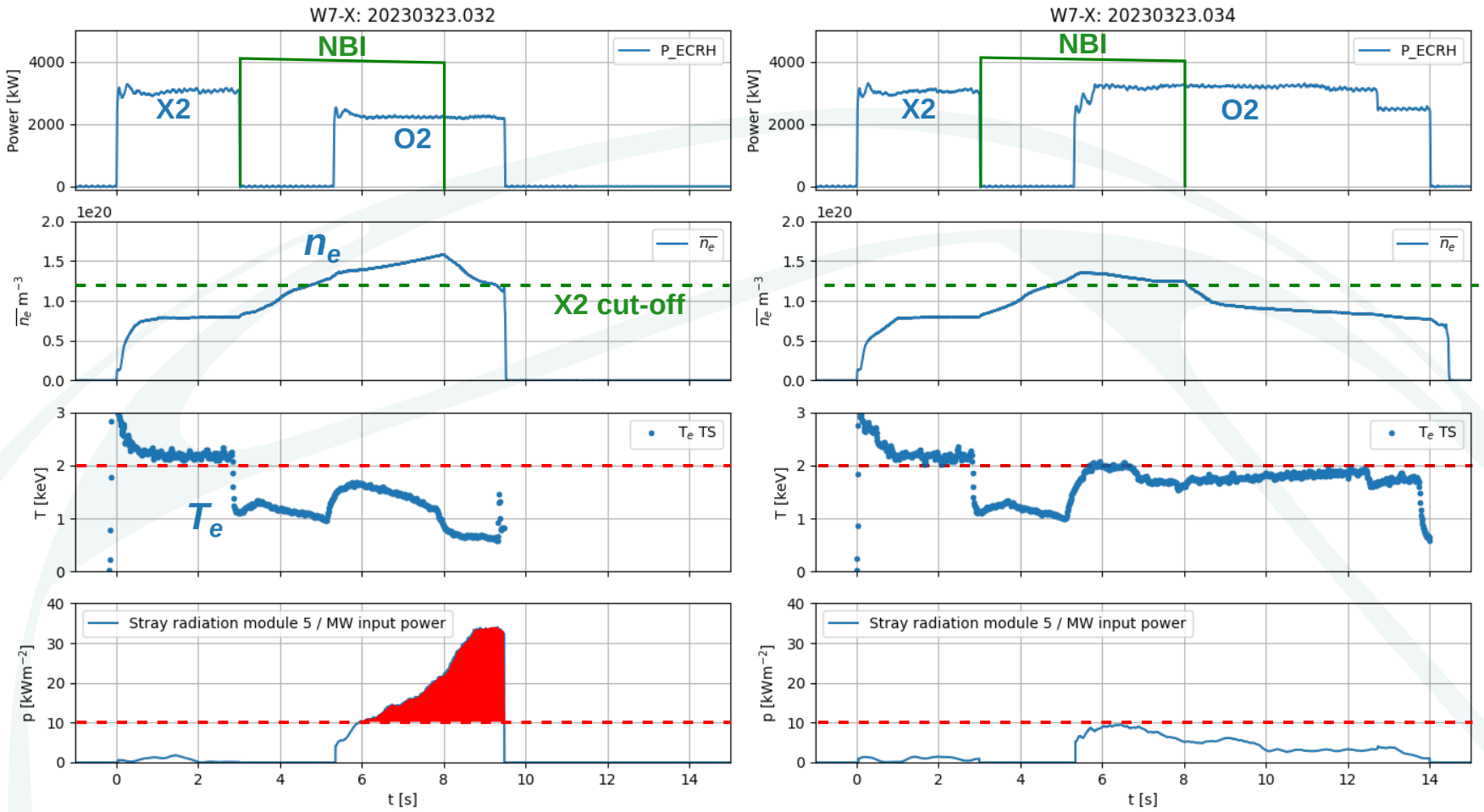

Stray radiation levels in practice

- Lots of effort was invested in protecting components. Was is necessary?
    - No major issues seen so far, but..
        - preparedness paradox?
        - We have not yet run the planned high-power long pulses!

Quantitative assesment:
- Stray radiation levels measured by sniffer probes in main vessel as expected ~40-50 kWm^{-2} near launchers, ~10-20 kWm^{-2} on opposite side.

Stray radiation levels in practice

- Lots of effort was invested in protecting components. Was is necessary?
    - No major issues seen so far, but..
        - preparedness paradox?
        - We have not yet run the planned high-power long pulses!

Quantitative assesment:

- Stray radiation levels measured by sniffer probes in main vessel as expected ~40-50 kWm^{-2} near launchers, ~10-20 kWm^{-2} on opposite side.
- Bolometer measurements near back of ports shows much lower levels O~100s Wm^{-2}.
- ECH diode on ECE wavelguide indicates ~200 Wm^{-2} (front of port).
- Ring-sensors on interferometry windows show almost no signal, indicating O~50 Wm^{-2}

  Is the fall-off more rapid than expected along ports?? ... to be determined.

Decay of radiation along port

[MISTRAL measurement, J. Baldzuhn et al, R. König ITPA TGD]

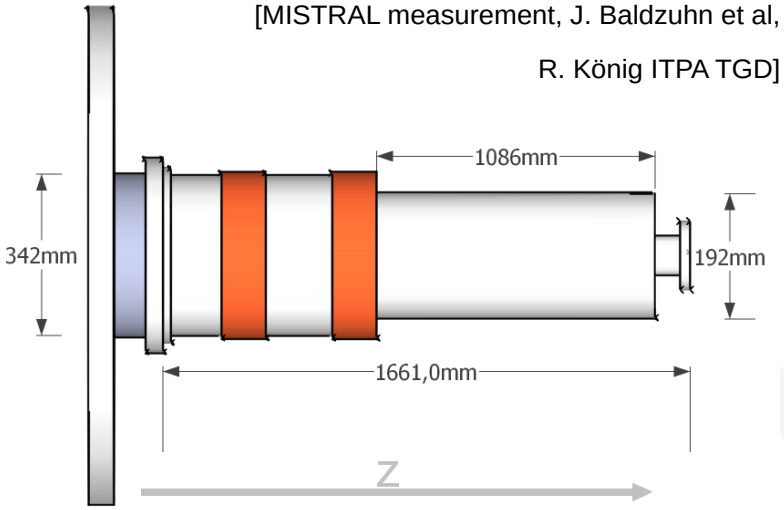

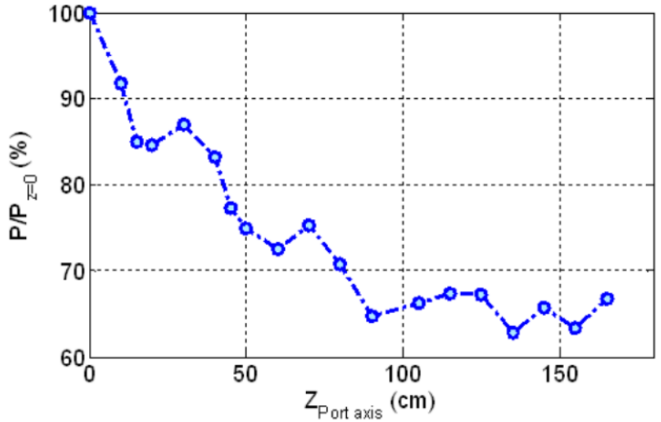

Stray radiation levels in practice

- Lots of effort was invested in protecting components. Was is necessary?
    - No major issues seen so far, but..
        - preparedness paradox?
        - We have not yet run the planned high-power long pulses!

Quantitative assesment:
- Stray radiation levels measured by sniffer probes in main vessel as expected ~40-50 kWm^{-2} near launchers, ~10-20 kWm^{-2} on opposite side.
- Bolometer measurements near back of ports shows much lower levels O~100s Wm^{-2}.
- ECH diode on ECE wavelguide indicates ~200 Wm^{-2} (front of port).
- Ring-sensors on interferometry windows show almost no signal, indicating O~50 Wm^{-2}
  Is the fall-off more rapid than expected along ports?? ... to be determined.

More sensors to be installed in OP2.2 (2024/5) and more attention will be paid as we go to longer shots at higher ECRH power, especially O2 at high density.

Update in spring 2025?

Decay of radiation along port

[MISTRAL measurement, J. Baldzuhn et al, R. König ITPA TGD]

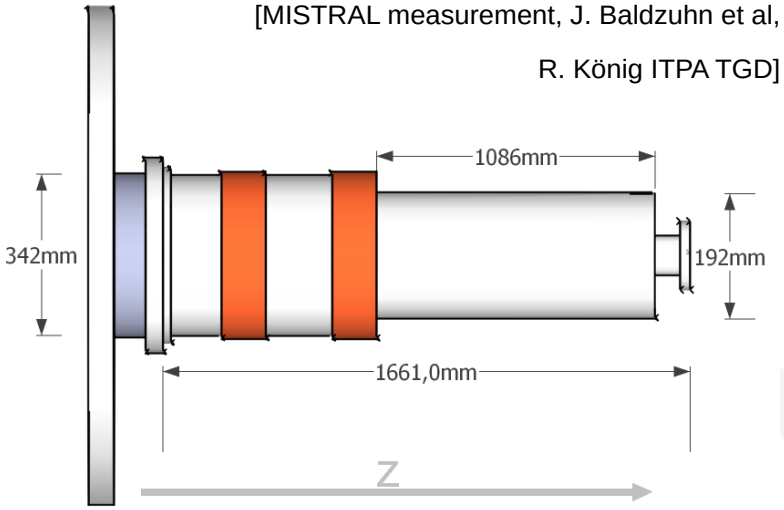

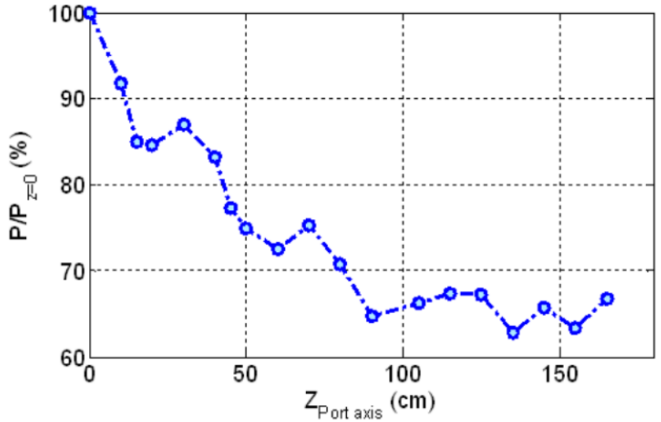

END

That's all

Template

blah blah