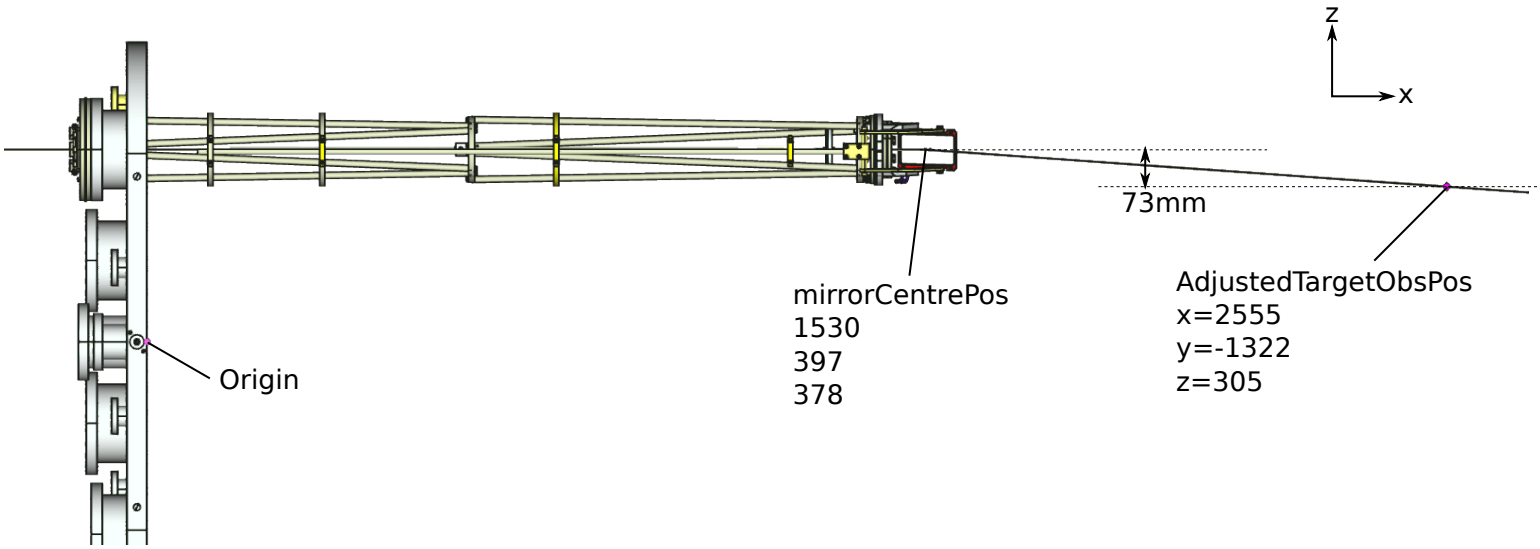
z
x
73mm
mirrorCentrePos
1530
397
378
AdjustedTargetObsPos
x=2555
y=-1322
z=305
Origin

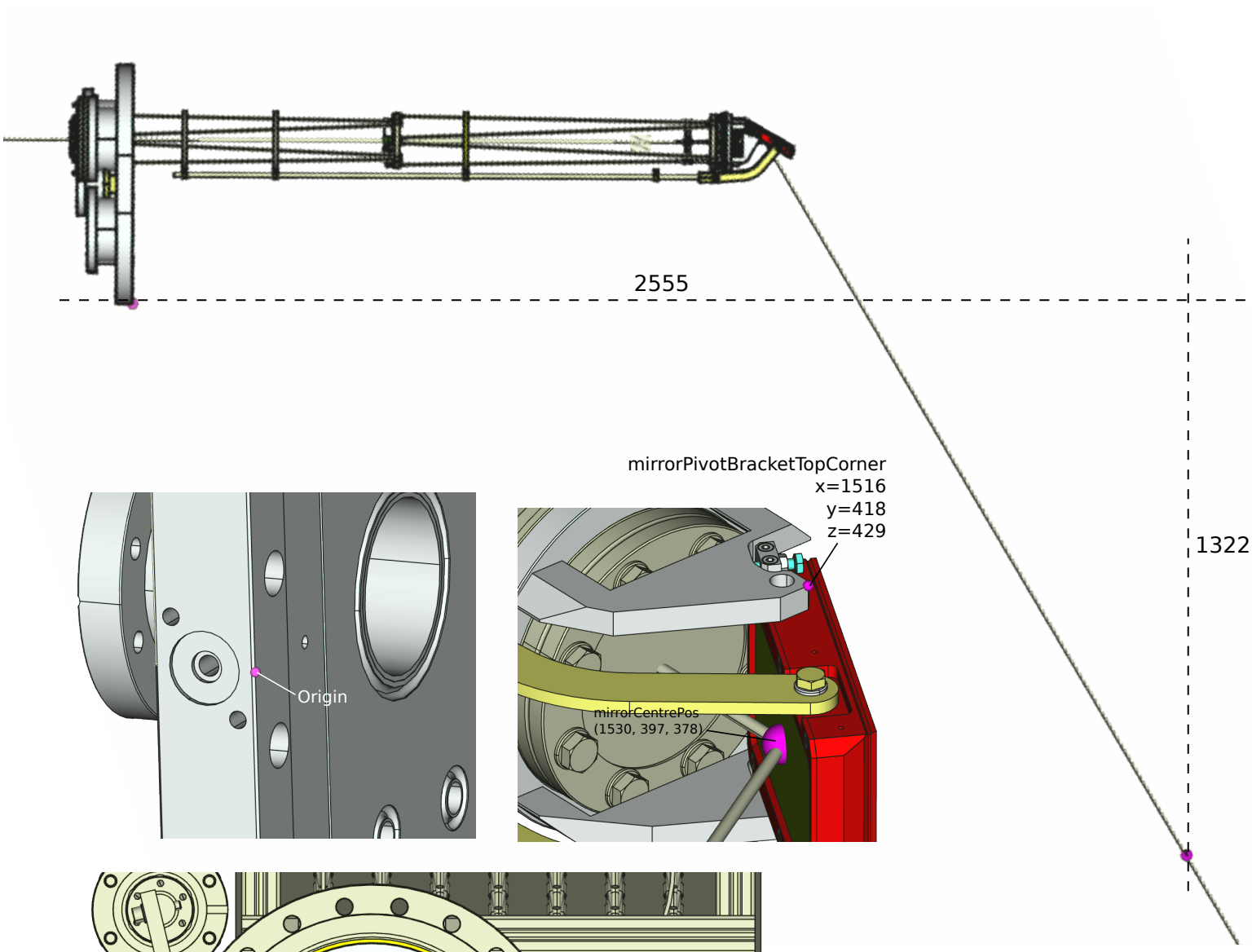
2555
1322

Origin
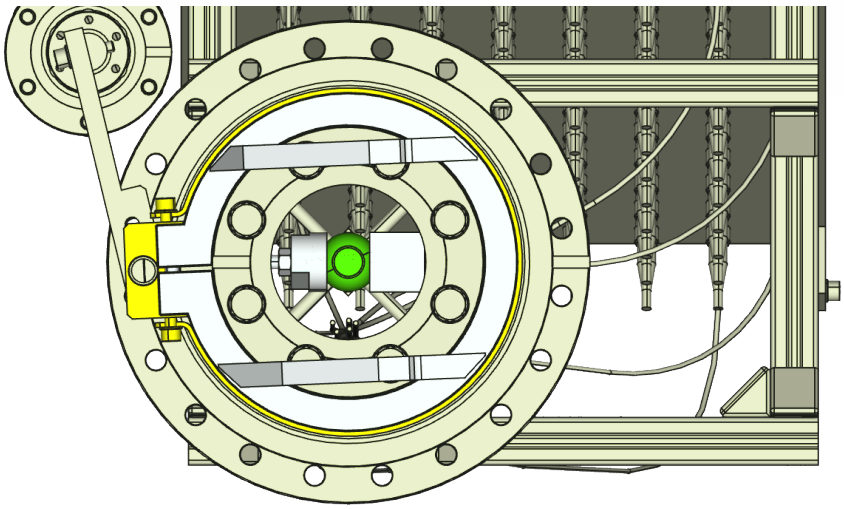
mirrorPivotBracketTopCorner
x=1516
y=418
z=429
mirrorCentrePos
(1530, 397, 378)